NATIONAL METAL SHAPES, INC.
425 S. SANDUSKY STREET
DELAWARE, OHIO 43015
(740) 363-9559
(800) 837-9559
FAX (740) 363-3000

534

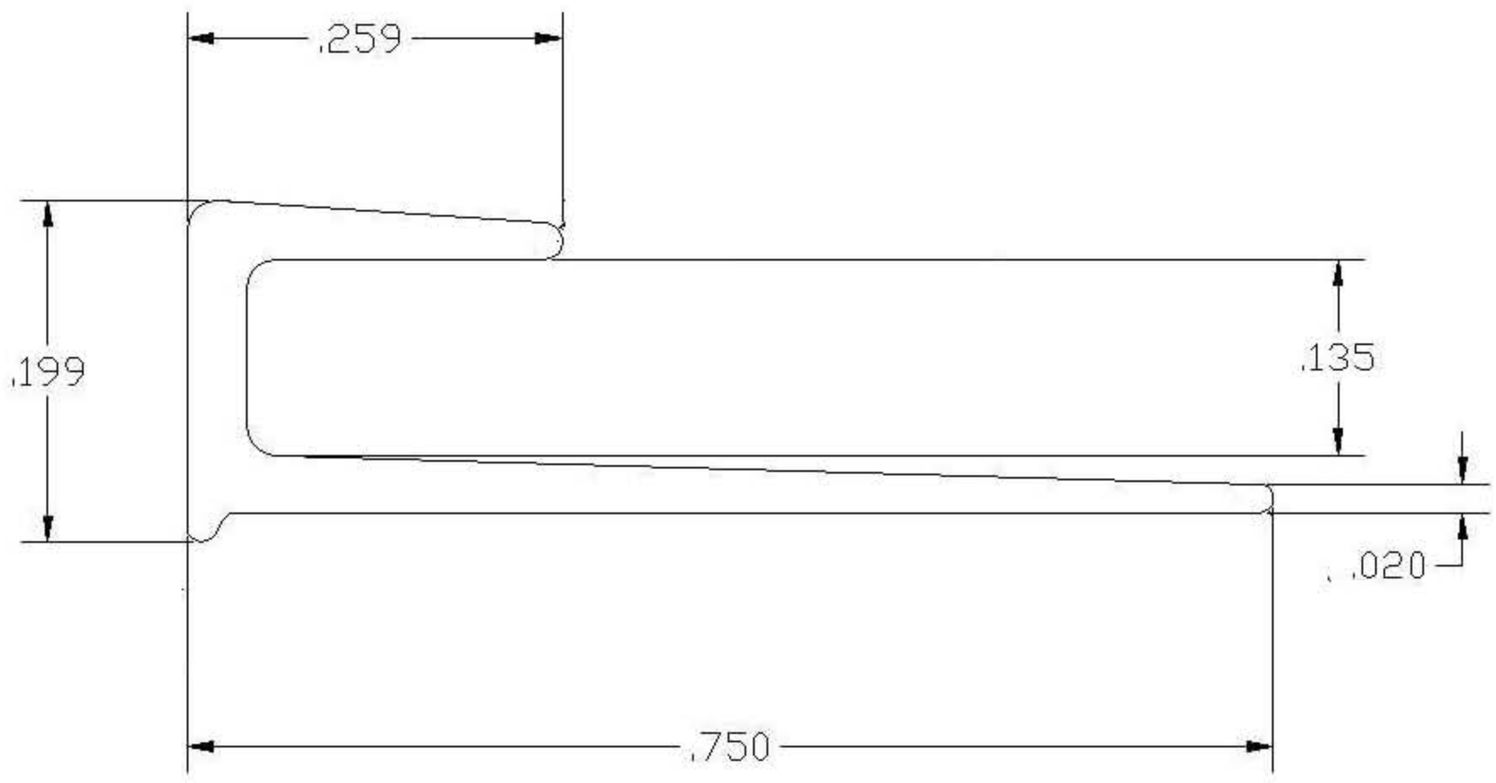

Item #: 534

Description: 3/32" Cap, Square Top, 12' Long

Material: Aluminum - Non-Hammered and Colonial Finishes

STANDARD TOLERANCES FOR EXTRUDED SHAPES APPLY UNLESS OTHERWISE SPECIFIED