NMS

NATIONAL METAL SHAPES, INC.

425 S. SANDUSKY STREET
DELAWARE, OHIO 43015
(740) 363-9559
(800) 837-9559
FAX (740) 363-3000

434

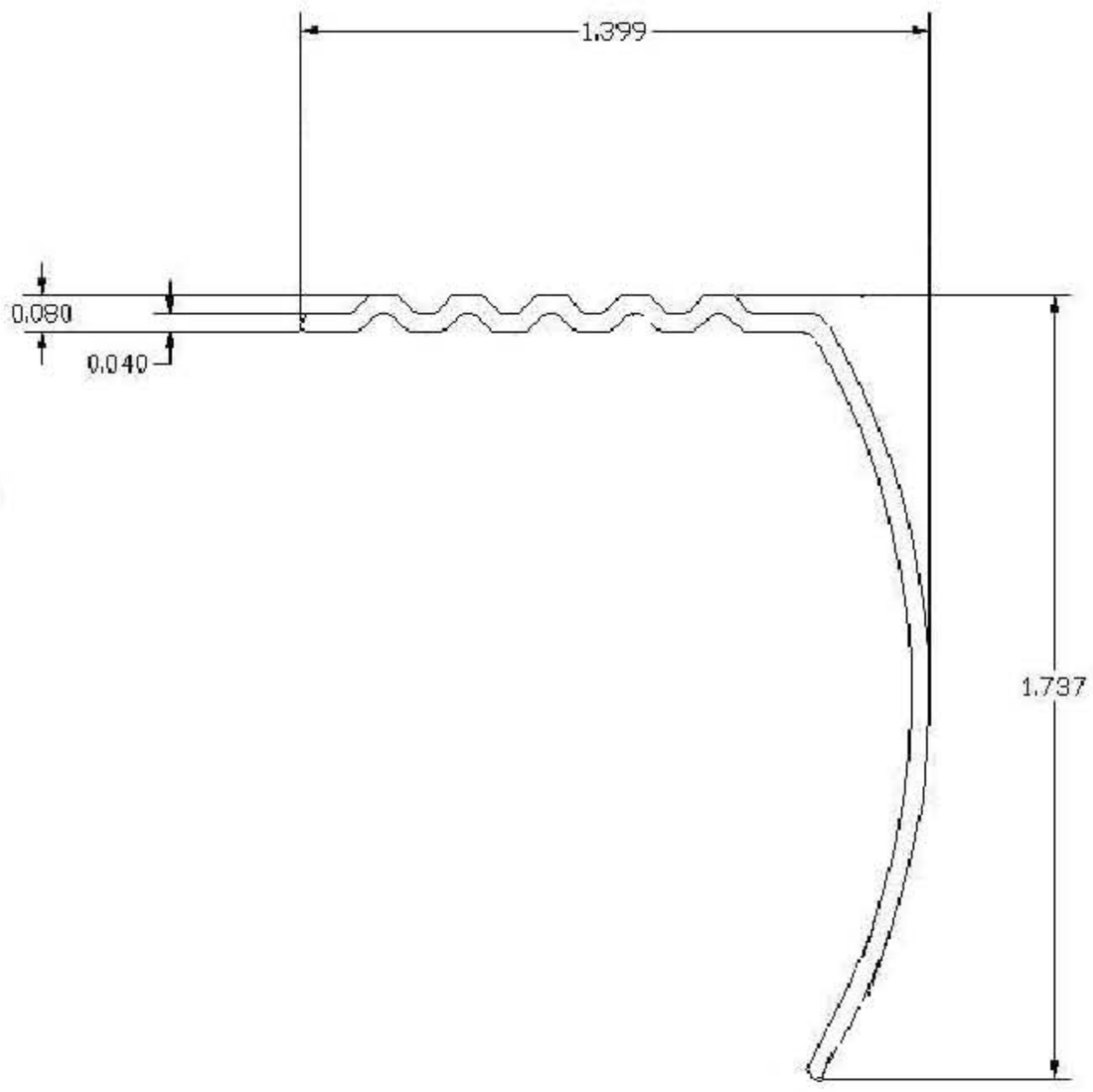

Item #: 434

Description: Stair Nose, 1 5/8" Drop, 12' Long

Material: Aluminum - Hammered and Colonial Finishes

STANDARD TOLERANCES FOR EXTRUDED SHAPES APPLY UNLESS OTHERWISE SPECIFIED